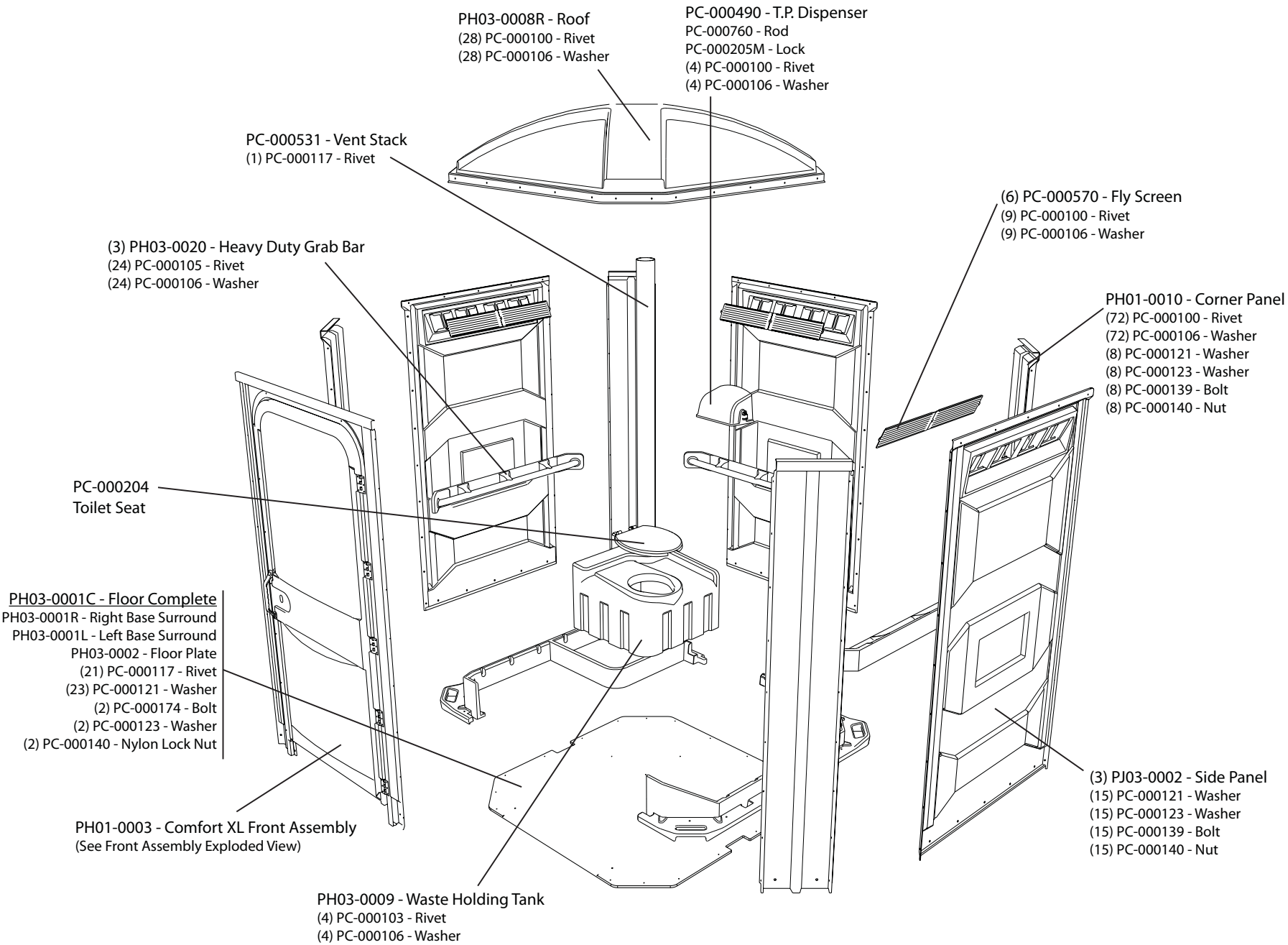
PH03-0008R - Roof
(28) PC-000100 - Rivet
(28) PC-000106 - Washer
PC-000490 - T.P. Dispenser
PC-000760 - Rod
PC-000205M - Lock
(4) PC-000100 - Rivet
(4) PC-000106 - Washer
PC-000531 - Vent Stack
(1) PC-000117 - Rivet
(6) PC-000570 - Fly Screen
(9) PC-000100 - Rivet
(9) PC-000106 - Washer
(3) PH03-0020 - Heavy Duty Grab Bar
(24) PC-000105 - Rivet
(24) PC-000106 - Washer
PH01-0010 - Corner Panel
(72) PC-000100 - Rivet
(72) PC-000106 - Washer
(8) PC-000121 - Washer
(8) PC-000123 - Washer
(8) PC-000139 - Bolt
(8) PC-000140 - Nut
PC-000204
Toilet Seat
PH03-0001C - Floor Complete
PH03-0001R - Right Base Surround
PH03-0001L - Left Base Surround
PH03-0002 - Floor Plate
(21) PC-000117 - Rivet
(23) PC-000121 - Washer
(2) PC-000174 - Bolt
(2) PC-000123 - Washer
(2) PC-000140 - Nylon Lock Nut
(3) PJ03-0002 - Side Panel
(15) PC-000121 - Washer
(15) PC-000123 - Washer
(15) PC-000139 - Bolt
(15) PC-000140 - Nut
PH01-0003 - Comfort XL Front Assembly
(See Front Assembly Exploded View)
PH03-0009 - Waste Holding Tank
(4) PC-000103 - Rivet
(4) PC-000106 - Washer

PH01-0003 Front Assembly

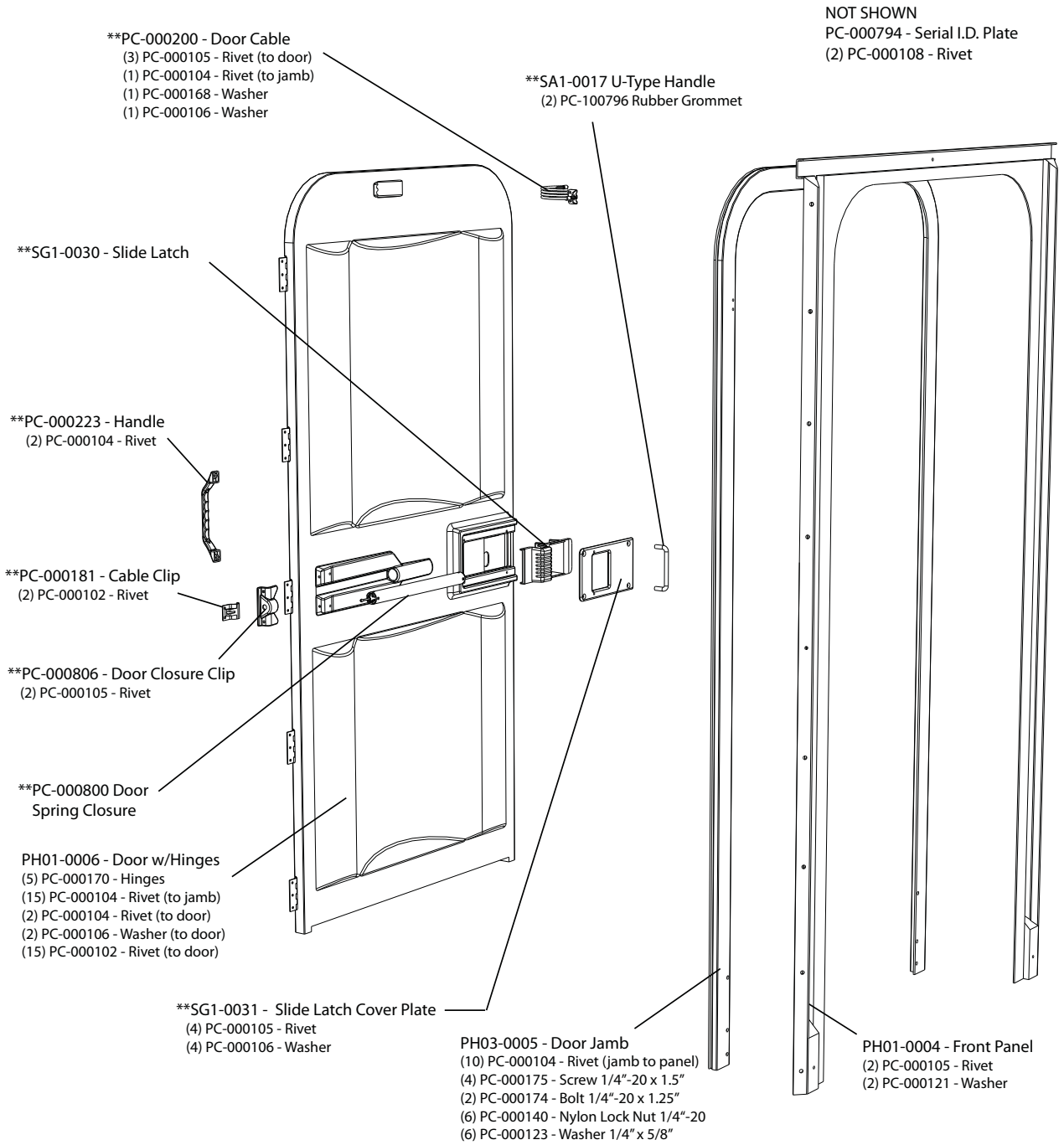

** Items are not included with PH01-0003 Front Assembly.
Parts bag PH03-0206 is available for replacement purposes.
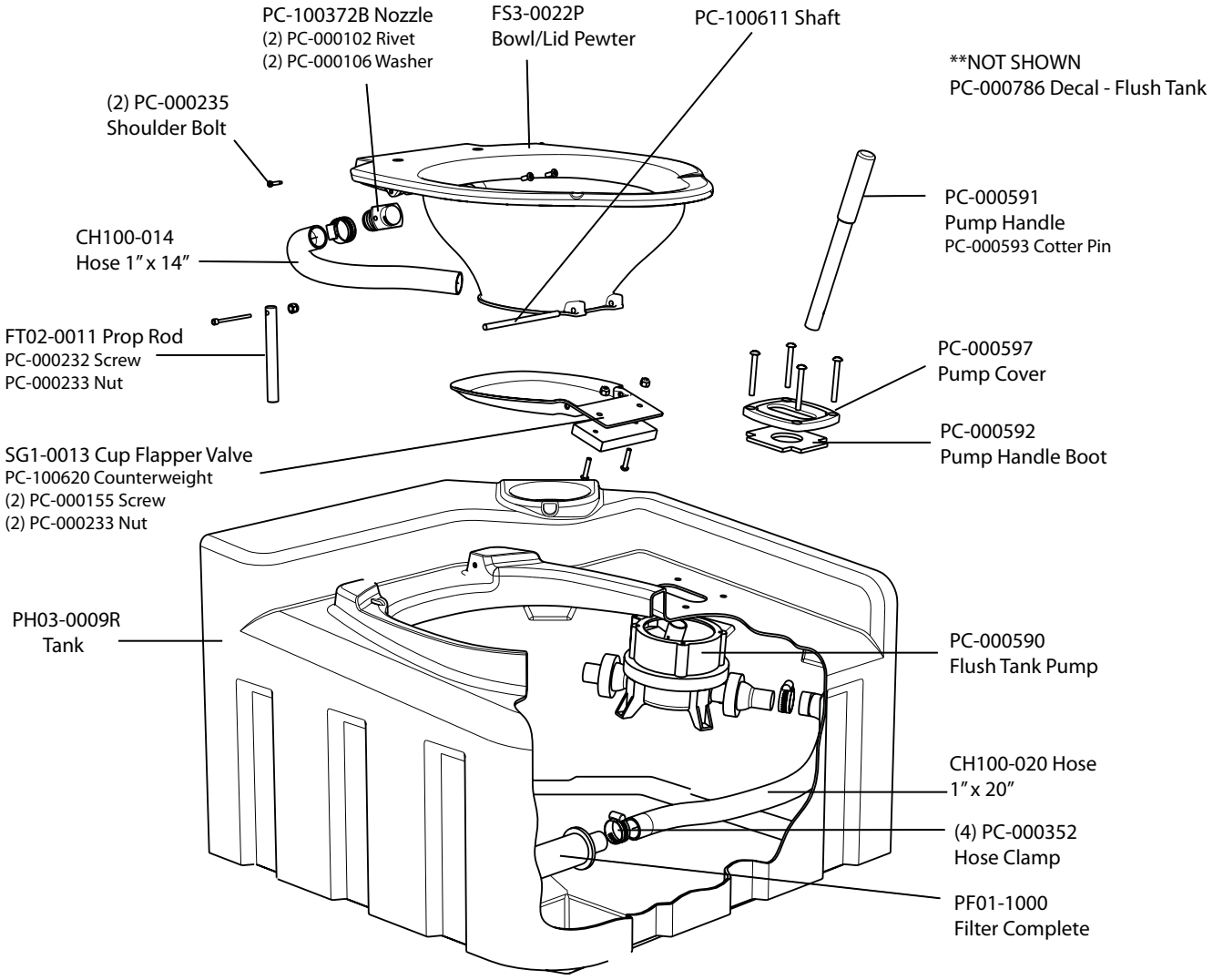
Optional Recirculating Flush System - Exploded View